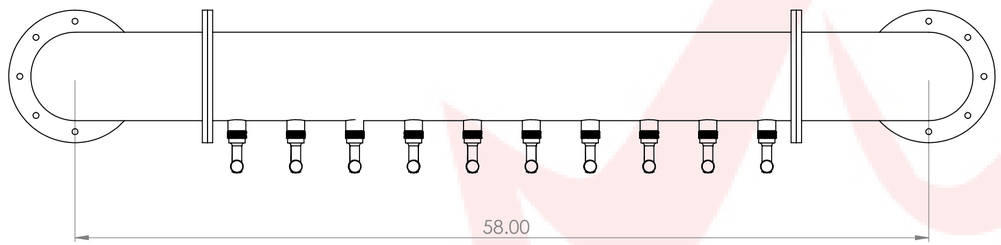

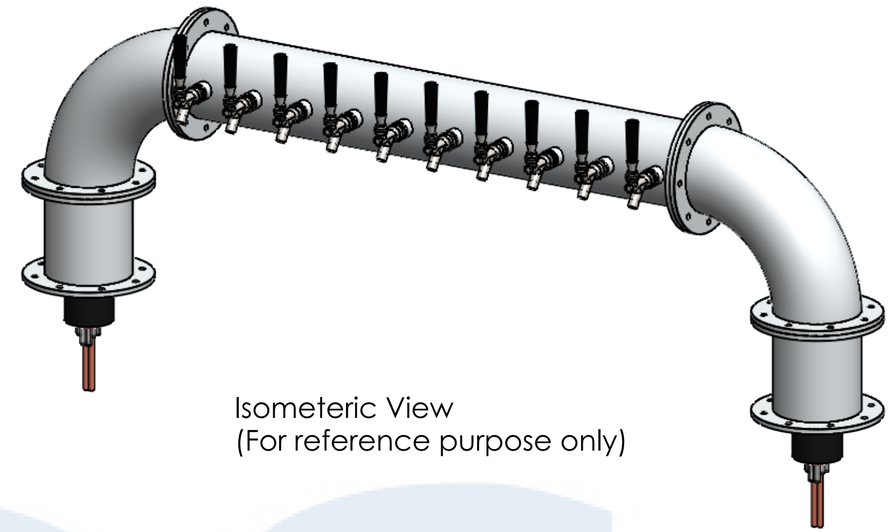

Isometeric View
(For reference purpose only)

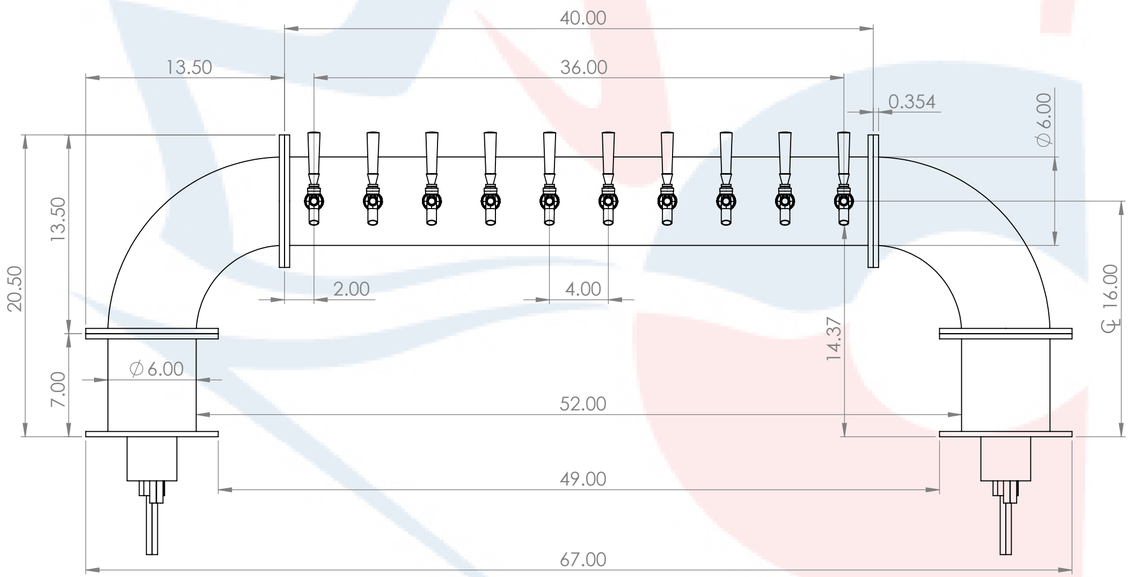

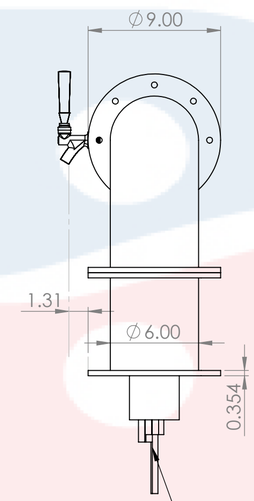

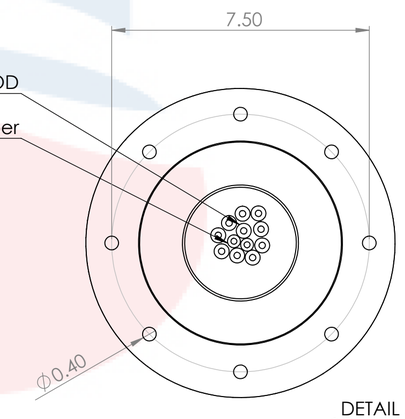

304SS tube connected to CBS NSF Flexible
Total Barrier Tubing to 15lbs of Restriction

DETAIL A
SCALE 1 : 3

Suggested Drip Tray:
BB701345 - 45" x 7" BSS Drip Tray
BB702445 - 45" x 7" BSS Spray Drip Tray

	Name		Date	Title:
Drawn by:	Canadian Beverage Supply Inc.		12/14/2022	6" 10 Tap Golden Gate Tower
Approved by:	VP Sales			
Material:	304 SS	Finish:	Polished SS	Part Number: BB102675-10SSCK / Revision:

Unless otherwise mentioned, dimensions are inches

SCALE: 1:7 SHEET 1 OF 1